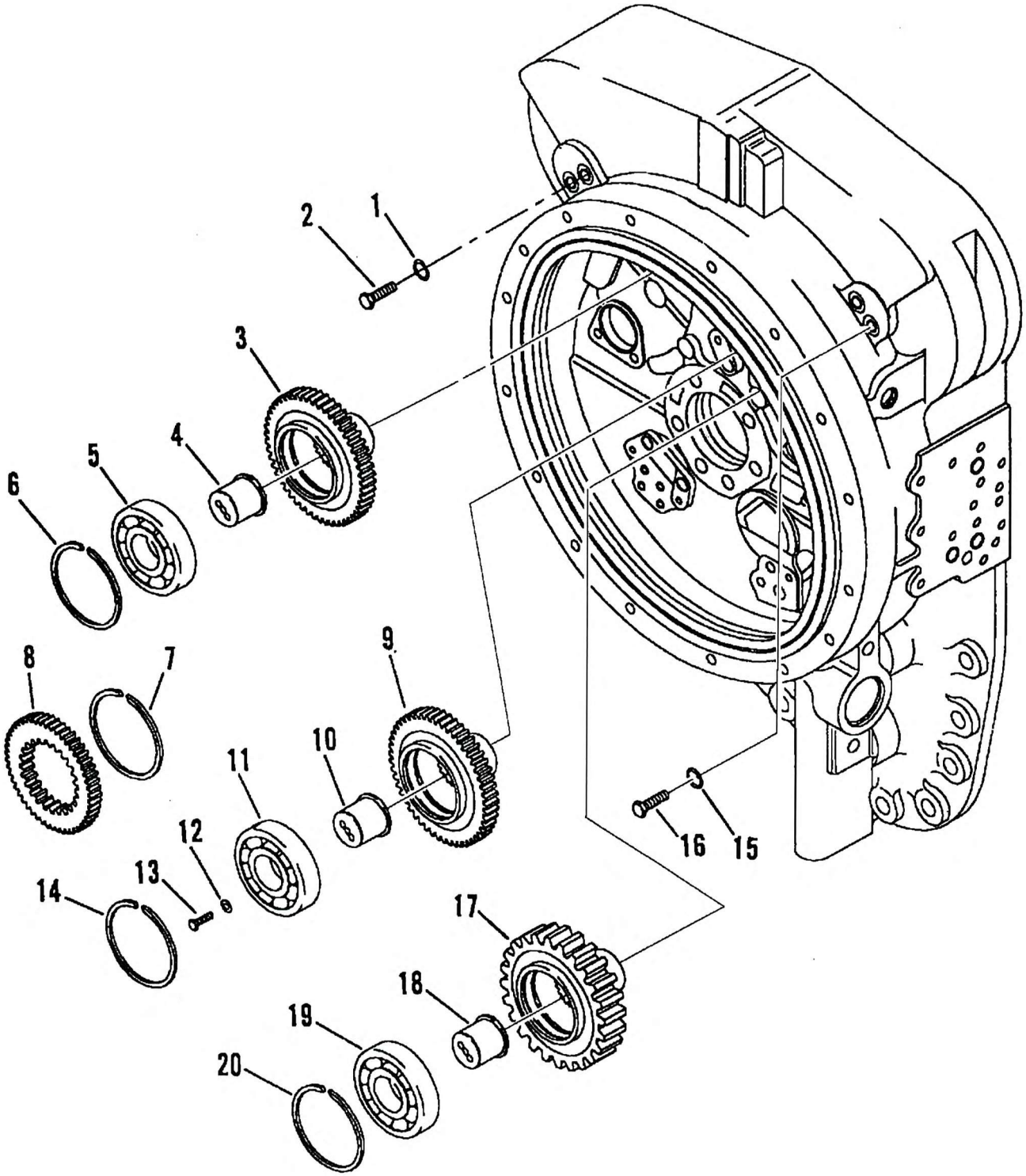

90014204

(SHEET 1 OF 1)